SOLENÓIDE/ SOLENOID SWITCH / SOLENOIDE

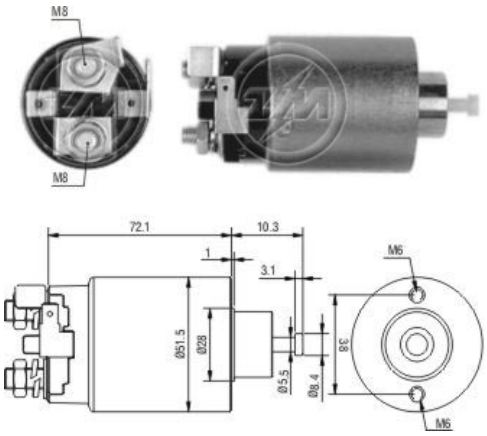

Solenóide ZM 698 12v **CAP ZM 698.96**

Código Original do Solenóide / Solenoid Original Code / Código Original del Solenoide

MAZDA:
N326-18-X10

MITSUBISHI:
M371X64271
M371X64273
M371X64471
M371X74471
MD611591

NISSAN:
23343-M8210

Código do Motor / Starter Code / Código del Motor

MITSUBISHI:
M1T70781
M1T70881
M1T71381
M1T71781
M1T74181
M3T27781

Aplicação / Used on / Aplication

Montadora / Car Maker	Veículo / Vehicle	Variação do modelo / Model variation:	De / From:	Até / To:
MITSUBISHI	Galant			
	Pajero	Sport 3.0 V6		
	Sigma			
Montadora / Car Maker	**Veículo / Vehicle**	**Variação do modelo / Model variation:**	**De / From:**	**Até / To:**
NISSAN	Cherry	1.3 with L13 engine	1982	1986
	Micra	1.0i with MA10S engine	1982	1989
		1.2 with MA12S engine	1986	
	Patrol	Hardtop 2.8 with L28 engine	1980	1988
	Prairie	1.5 S with E15S engine	1984	1987
	Sunny	I 1.3 Lim with E13 engine	1982	1987
		I 1.5 with E15S engine	1982	1986
		II 1.3 with E13S engine	1986	
		II 1.4 LX with GA14S engine	1988	1991
Montadora / Car Maker	**Veículo / Vehicle**	**Variação do modelo / Model variation:**	**De / From:**	**Até / To:**