SOLENÓIDE/ SOLENOID SWITCH / SOLENOIDE

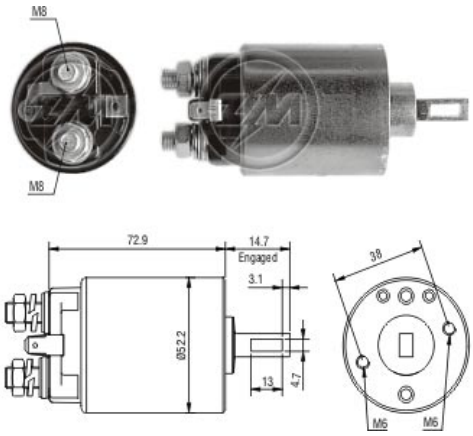

Solenóide ZM 682 12v — CAP ZM 682.96

Código Original do Solenóide / Solenoid Original Code / Código Original del Solenoide

HITACHI:

2114-17005
2114-17505
2114-37602
2114-47005

NISSAN:

23343-04E00

Código do Motor / Starter Code / Código del Motor

HITACHI:

S114-252A
S114-253A
S114-254B
S114-255A
S114-258A
S114-264A
S114-322A
S114-344
S114-347B
S114-393
S114-403B
S114-440
S114-441A
S114-489
S13-56A
S13-56B

Aplicação / Used on / Aplication

Montadora / Car Maker	Veículo / Vehicle	Variação do modelo / Model variation:	De / From:	Até / To:
MASSEY FERGUSSON	Tractor	MF 1010 with Toyosha diesel engine	1982	1994
		MF 1020 with Toyosha diesel engine	1982	1994
		MF 1030 with Toyosha 3 -87 diesel engine	1984	1991
		MF 1035 with Toyosha 3 -92 diesel engine	1986	1991
		MF 205 Toyosha 2-77 diesel	1979	1984
Montadora / Car Maker	**Veículo / Vehicle**	**Variação do modelo / Model variation:**	**De / From:**	**Até / To:**
NISSAN	200	SX 2.0 L	1980	1986
		SX 1.8 L	1984	1988
	210	1.2 L	1979	1982
		1.4 L	1979	1982
		1.5 L	1980	1982
	280	Z 2.8 L	1978	1983
		ZX 2.8 L	1978	1983
	310	1.4 L	1979	1980
		1.5 L	1981	
	510	2.0 L	1980	1981
	D21	Pick-up 2.4 L	1986	1987
	F10	1.4 L	1978	
	Multi	2.0 L	1986	1988
	Pulsar	1.6 L	1985	1988
	Sentra	1.6 L	1985	1988
	Stanza	2.0 L	1982	1989
Montadora / Car Maker	**Veículo / Vehicle**	**Variação do modelo / Model variation:**	**De / From:**	**Até / To:**