SOLENÓIDE/ SOLENOID SWITCH / SOLENOIDE

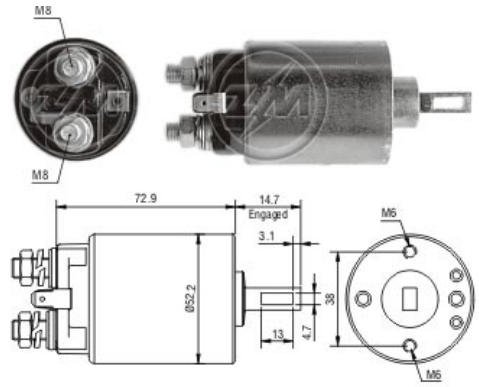

Note: Similar to ZM 581 except plunger spring.
Nota: Similar ao ZM 581 sem a mola do êmbolo.

Solenóide ZM 680 12v — CAP ZM 680.96

Código Original do Solenóide / Solenoid Original Code / Código Original del Solenoide

BOSCH:
1.987.001.012
HITACHI:
2114-57001
HONDA:
31204-634-005
NISSAN:
23343-N3300
23343-N3301

Código do Motor / Starter Code / Código del Motor

HITACHI:
S108-85
S108-86
S108-91
S114-170B
S114-180
S114-254A

Aplicação / Used on / Aplication

Montadora / Car Maker	Veículo / Vehicle	Variação do modelo / Model variation:	De / From:	Até / To:
MASSEY FERGUSSON	Tractor	MF 1030 with Toyosha 3 -87 diesel engine	1984	1991
		MF 1010 with Toyosha diesel engine	1982	1994
		MF 1020 with Toyosha diesel engine	1982	1994
		MF 1035 with Toyosha 3 -92 diesel engine	1986	1991
Montadora / Car Maker	**Veículo / Vehicle**	**Variação do modelo / Model variation:**	**De / From:**	**Até / To:**
NISSAN	200	SX 2.0 L	1977	1980
	280	Z 2.8 L	1978	1983
		ZX 2.8 L	1978	1983
	510	2.0 L	1978	1979
	610	2.0 L	1974	1976
		1.8 L	1973	
	620	Pick-up 1.8 L	1974	
		Pick-up 2.0 L	1975	1979
	710	1.8 L	1974	
	Bluebird	1.8 with L18S engine	1980	1984
		1.8 Coupe with L18T engine	1980	1984
		1.8 with L18 engine	1974	1979
	Datsun	160 J 1.6 with L16T engine	1973	1982
		160 J 1.6i.e. with L16 engine	1978	1982
		180 B 1.8	1977	1981
	Laurel	2.4 with L24E/ L24S engine	1985	1987
	Patrol	Hardtop 2.8 with L28 engine	1980	1988
		2.8 with L28 engine	1980	1988
		Station Wagon 2.8 with L28 engine	1980	1988
Montadora / Car Maker	**Veículo / Vehicle**	**Variação do modelo / Model variation:**	**De / From:**	**Até / To:**