SOLENÓIDE/ SOLENOID SWITCH / SOLENOIDE

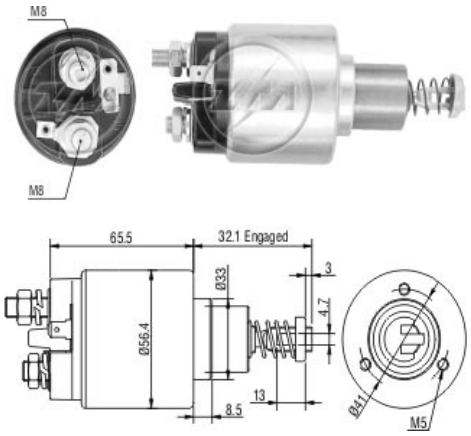

Solenóide ZM 676 12v **CAP ZM 676.91**

Código Original do Solenóide / Solenoid Original Code / Código Original del Solenoide
BOSCH:
0.331.303.045

Código do Motor / Starter Code / Código del Motor
BOSCH:
0.001.211.251
0.001.211.506

Aplicação / Used on / Aplication

Montadora / Car Maker	Veículo / Vehicle	Variação do modelo / Model variation:	De / From:	Até / To:
VOLKSWAGEN	Transporter	III 2.1 with MV engine	1985	1986
		III 1.9 with DG engine	1982	1986
		III 1.9 with DF engine	1982	1986
		III 1.9 with GW engine	1983	1989
		III 1.9 with DH engine	1983	1985
		III 1.9 Syncro with DG engine	1982	1986
		III 2.1 with DJ engine	1986	1986
Montadora / Car Maker	**Veículo / Vehicle**	**Variação do modelo / Model variation:**	**De / From:**	**Até / To:**