SOLENÓIDE/ SOLENOID SWITCH / SOLENOIDE

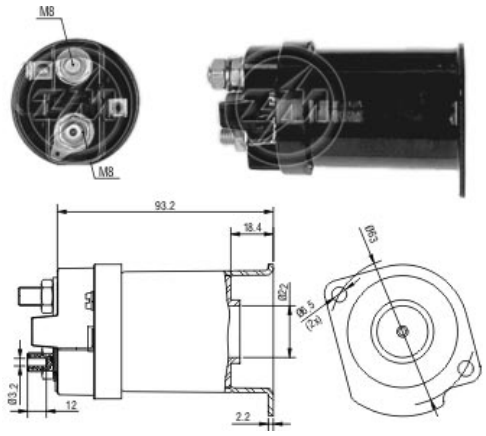

Solenóide ZM 556 12v **CAP ZM 556.91**

Código Original do Solenóide / Solenoid Original Code / Código Original del Solenoide

DELCO REMY:

3471693

DR902

Código do Motor / Starter Code / Código del Motor

DELCO REMY:

3471143

3471163

Aplicação / Used on / Aplication

Montadora / Car Maker	Veículo / Vehicle	Variação do modelo / Model variation:	De / From:	Até / To:
GM-OPEL	Ascona	B 1.2 S with 12 S engine	1975	1979
		B 1.2 with 12 N engine	1976	1979
	Corsa	A 1.0 with 10 S engine	1982	1993
	Kadett	D 1.2 with 12 N engine	1979	1982
		D 1.2 S with 12 S engine	1979	1984
		D Caravan 1.2 S with 12 S engine	1979	1984
		C 1.0 with 10 N engine	1974	1986
	Manta	B 1.2 S with 12 S engine	1976	1983
		B 1.2 N with 12 N engine	1975	1979
Montadora / Car Maker	**Veículo / Vehicle**	**Variação do modelo / Model variation:**	**De / From:**	**Até / To:**