SOLENÓIDE/ SOLENOID SWITCH / SOLENOIDE

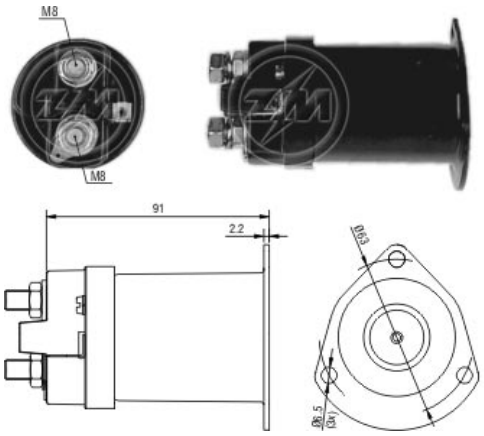

Solenóide ZM 555 12v **CAP ZM 555.91**

Código Original do Solenóide / Solenoid Original Code / Código Original del Solenoide

DELCO REMY:

3471725

DR904

Código do Motor / Starter Code / Código del Motor

DELCO REMY:

3471155

3471169

Aplicação / Used on / Aplication

Montadora / Car Maker	Veículo / Vehicle	Variação do modelo / Model variation:	De / From:	Até / To:
GM-OPEL	Ascona	C 1.6 with 16 NOHC II engine	1981	1988
		C 1.6 S with 16 SHOHC engine	1981	1986
		C 1.8i	1982	1986
	Astra	1.6 with 18 EOHC engine	1981	1987
		1.6 Autom with 16 SH OHC engine	1984	1986
	Kadett	E 1.8 E with 18 EOHC engine	1983	1984
		E GTE with 18 EOHC engine	1983	1984
		E 1.8i with C18 NTOHCII engine	1985	1685
		E 1.8i	1984	1986
		E Gsi	1984	1986
	Manta	A 1.8 S with 18 SOHC engine	1982	1987
	Rekord	E 1.8 with ..18.. engine	1982	1986
		E 1.8 S with ..18.. engine	1982	1986
		E 1.8i with ..18.. engine	1982	1986
	Vectra	A 1.6 with 16 SH OHC engine	1981	1988
		A 1.8	1982	1988
Montadora / Car Maker	**Veículo / Vehicle**	**Variação do modelo / Model variation:**	**De / From:**	**Até / To:**
GM-VAUXHALL	Belmont	1.6 with 18EOHC engine	1981	1987
		1.6i with 18EOHC engine	1981	1987
	Carlton	1.8 with ..18.. engine	1982	1986
	Cavalier	1.6 with 16SHOHC engine	1981	1988
Montadora / Car Maker	**Veículo / Vehicle**	**Variação do modelo / Model variation:**	**De / From:**	**Até / To:**