SOLENÓIDE/ SOLENOID SWITCH / SOLENOIDE

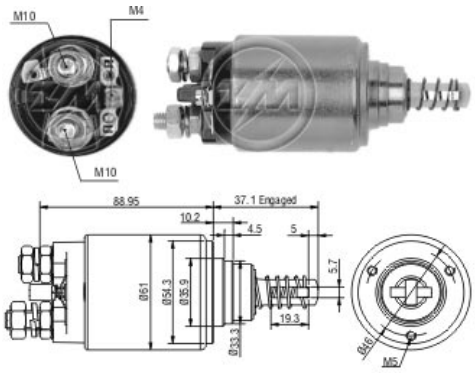

Note: Similar to ZM 744 with short moveable contact rod.
Nota: Similar ao ZM 744 com pino de contato curto.

Solenóide ZM 544 12v — CAP ZM 538.91

Código Original do Solenóide / Solenoid Original Code / Código Original del Solenoide

BOSCH:

0.331.401.040
0.331.402.001
0.331.402.019
0.331.402.030
0.331.402.035
0.331.402.039
0.331.402.087
0.331.402.205
0.331.402.501
0.331.402.504
0.331.402.519
0.331.402.535
0.331.402.539

Código do Motor / Starter Code / Código del Motor

BOSCH:

0.001.362.062
0.001.362.073
0.001.362.092
0.001.367.028
0.001.367.029
0.001.367.030
0.001.367.037
0.001.367.045

Aplicação / Used on / Aplication

Montadora / Car Maker	Veículo / Vehicle	Variação do modelo / Model variation:	De / From:	Até / To:
ALFA ROMEO	Alfetta	(116) 2.0 TD with VM4HT/2 engine	1979	1983
Montadora / Car Maker	**Veículo / Vehicle**	**Variação do modelo / Model variation:**	**De / From:**	**Até / To:**
GM-OPEL	Senator	A 2.2 TD with 23TD engine	1984	1987
Montadora / Car Maker	**Veículo / Vehicle**	**Variação do modelo / Model variation:**	**De / From:**	**Até / To:**
MERCEDES-BENZ	8 (W115)	200 D with OM 615.913 engine	1968	1977
		220 D with OM 615.912 engine	1968	1977
		240 D with OM 616.916 engine	1973	1977
		240 D 3.0 with OM 617.910 engine	1974	1976
	Classe G (G-Class)	300 GD with OM 617.931 engine	1979	1991
		290 GD with OM 602.942 engine	1992	
		240 GD with OM 616.936 engine	1979	1991
	Classe S (S-Class)	123 T-Modell 240 T D with OM 616.912 engine	1977	1985
		123 T-Modell 300 T D with OM 617.912 engine	1977	1985
		123 300 T Turbo-D with OM 617.952 engine	1980	1985
	Henshel	2 t 206 D 2.2 with OM 615.939 engine	1973	1977
		2 t 206 D 2.2 with OM 615.917 engine	1973	1977
		2 t 206 D 2.2 with OM 615.937 engine	1973	1977
	Kombi	Estate 240 TD with OM 616.912 engine	1977	1985
		Estate 300 TD with OM 617.912 engine	1977	1985
		Estate 300 T Turbo-D with OM 617.952 engine	1980	1985
	Saloon (W123)	240 D with OM 616.912 engine	1976	1985
		300 D with OM 617.912 engine	1976	1985
		300 Turbo-D with OM 617.952 engine	1981	1985
		200 D with OM 615.940 engine	1979	1985
		220 D with OM 615.941 engine	1976	1979
	T1 (601)	207 D 2.4 Bus	1982	1990
		209 D 2.9 with OM 617.913 engine	1982	1990
		Box 207 D 2.4 with OM 616.937 engine	1982	1990
		Box 207 D 2.4 with OM 616.939 engine	1982	1990
		Box 209 D 2.9 with OM 617.913 engine	1982	1990
		Bus 207 D 2.4 with OM 616.917 engine	1977	1990
		Bus 207 D 2.4 with OM 616.934 engine	1977	1990
		Bus 209 D 2.9 with OM 617.913 engine	1982	1990
		Flatbed / Chassis 207 D 2.4 with OM 616.917 engine	1977	1989
		Flatbed / Chassis 209 D 2.9 with OM 617.913 engine	1982	1990
		207 D 2.4 with OM 616.917 engine	1977	1982
		207 D 2.4 with OM 616.934 engine	1977	1982
		207 D 2.4 with OM 616.939 engine	1977	1990
	T1 (602)	307 D 2.4 with OM 616.937 engine	1982	1990
		307 D 2.4 with OM 616.939 engine	1982	1990
		307 D 2.4	1977	1983
		309 D 3.0 with OM 617.913 engine	1982	1990
		Box 307 D 2.4 with OM 616.937 engine	1982	1990
		Box 307 D 2.4 with OM 616.939 engine	1982	1990
		Box 309 D 3.0 with OM 617.913 engine	1982	1990
		Flatbed / Chassis 307 D 2.4 with OM 616.937 engine	1977	1990
		Flatbed / Chassis 307 D 2.4 with OM 616.939 engine	1977	1990
		Flatbed / Chassis 309 D 3.0 with OM 617.913 engine	1982	1990
	T1/TN	407 D with OM 616.913 engine	1981	1989
		407 D with OM 616.939 engine	1981	1989
		409 D with OM 617.913 engine	1982	1989
	T2/L	L 405 D with OM 636 engine	1972	1980

		L 405 D with OM 615 engine	1972	1980
		L 405 D with OM 621 engine	1972	1980
		L 406 DG with OM 615.910 engine	1968	1974
		L 407 D with OM 616.910 engine	1975	1988
	T2/LN1	507 D with OM 616.914 engine	1986	1989
		507 DK with OM 616.914 engine	1986	1989
	Unimog U	600 with OM 616.915 engine	1977	1988
		600 with OM 616.931 engine	1977	1988
		600 with OM 616.932 engine	1977	1988
		600L with OM 616.932 engine	1977	1988
		600L with OM 616.931 engine	1977	1988
		600L with OM 616.915 engine	1977	1988
		600L with OM 616.911 engine	1977	1988
		600T with OM 616.911 engine	1977	1988
		600T with OM 616.915 engine	1977	1988
		600T with OM 616.931 engine	1977	1988
		600T with OM 616.932 engine	1977	1988
		650 with OM 616.942 engine	1988	
		650 with OM 616.943 engine	1988	
		650L with OM 616.943 engine	1988	
		650L with OM 616.942 engine	1988	
		600 with OM 616.942 engine	1988	
		600 with OM 616.943 engine	1988	
		600 with OM 616.911 engine	1977	1988
	W123	200 with M 115.938. engine	1976	1980
		200 with M 115.939 engine.	1976	1980
		200 D with OM 615.940 engine	1976	1979
		220 D with OM 615.941 engine	1979	1985
		240 D with OM 616.912 engine	1976	1979
		300 D with OM 617.912 engine	1976	1980
		200 with M 102.920 engine	1980	1985
		200 with M 102.939 engine	1980	1985
Montadora / Car Maker	**Veículo / Vehicle**	**Variação do modelo / Model variation:**	**De / From:**	**Até / To:**