SOLENÓIDE/ SOLENOID SWITCH / SOLENOIDE

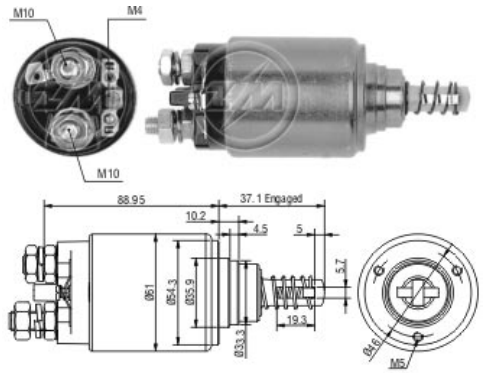

Note: Similar to ZM 545 with long moveable contact rod.
Note: Similar ao ZM 545 com pino de contato longo.

Solenóide ZM 1-545 24v CAP ZM 538.91

Código Original do Solenóide / Solenoid Original Code / Código Original del Solenoide

BOSCH:

0.331.402.051
0.331.402.053
0.331.402.054
0.331.402.094
0.331.402.206

Código do Motor / Starter Code / Código del Motor

BOSCH:

0.001.360.029
0.001.360.032
0.001.360.033
0.001.360.034
0.001.360.043
0.001.360.050
0.001.360.060
0.001.360.061
0.001.360.063
0.001.363.103
0.001.363.104
0.001.363.105
0.001.363.106
0.001.363.107
0.001.363.109
0.001.363.111
0.001.363.112
0.001.363.113
0.001.363.116
0.001.363.117
0.001.368.002
0.001.368.009
0.001.368.010
0.001.368.012
0.001.368.016
0.001.368.017
0.001.368.034
0.001.368.040
0.001.368.058
0.001.368.301

Aplicação / Used on / Aplication

Montadora / Car Maker	Veículo / Vehicle	Variação do modelo / Model variation:	De / From:	Até / To:
FIAT-IVECO	Zeta	109-14 with 8060.04.689 engine	1983	1985
		109-14 H with 8060.04.689 engine	1983	1985
		79-13 with 8060.04.060 engine	1979	1983
		79-13 with 8060.04.660 engine	1979	1983
		79-14 with 8060.04.660 engine	1983	1985
		79-14 H with 8060.04.660 engine	1983	1985
		79-14 V with 8060.04.660 engine	1983	1985
		95-14 with 8060.04.669 engine	1983	0185
		95-14 H with 8060.04.669 engine	1983	1985
Montadora / Car Maker	**Veículo / Vehicle**	**Variação do modelo / Model variation:**	**De / From:**	**Até / To:**