SOLENÓIDE/ SOLENOID SWITCH / SOLENOIDE

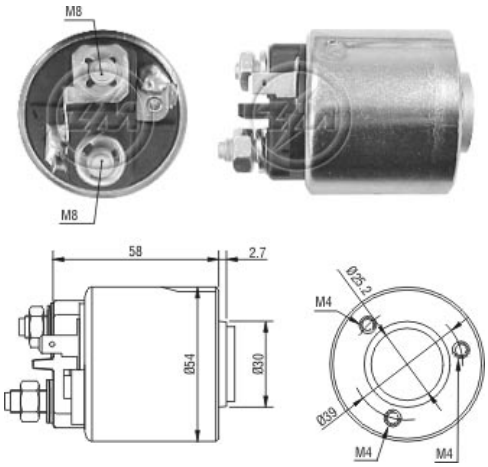

Solenóide ZM 1-491 12v — CAP ZM 597.91

Código Original do Solenóide / Solenoid Original Code / Código Original del Solenoide

PARIS RHONE:
594208

VALEO:
594208

Código do Motor / Starter Code / Código del Motor

PARIS RHONE:
432622
432631
D6RA133
D6RA141
D6RA33
D6RA41
D6RA45
D6RA53
D6RA63

RENAULT:
7700100647
7700870951

VALEO:
432622
432631
432638
432670
D6RA133
D6RA141
D6RA33
D6RA41
D6RA45
D6RA53
D6RA63

Aplicação / Used on / Aplication

Montadora / Car Maker	Veículo / Vehicle	Variação do modelo / Model variation:	De / From:	Até / To:
RENAULT	Clio	I 1.2 with E7F 700 engine	1990	1998
		I 1.2 with E7F 708 engine	1990	1998
		I 1.2 with E7F 706 engine	1991	1998
		I 1.4 with E7J 718 engine	1991	1998
		I 1.4 with E7J 719 engine	1991	1998
		I 1.4 with E7J 754 engine	1991	1998
		I 1.4 with E7J 756 engine	1991	1998
		I 1.4 with E7J 757 engine	1991	1998
		I Box 1.2 with E7F 706 engine	1991	1998
		I 1.8 with F3P 710 engine	1991	1998
		I 1.8 with F3P 714 engine	1991	1998
		I Box 1.2 with E7F 750 engine	1991	1998
		I 1.2 with E7F 750 engine	1990	1998
	Espace	III 2.0 with F3R 728 engine	1996	2000
		III 2.0 with F3R 729 engine	1996	2000
		III 2.0 with F3R 742 engine	1996	2000
		III 2.0 with F3R 768 engine	1996	2000
		III 2.0 with F3R 769 engine	1996	2000
	Kangoo	1.4 with E7J 780 engine	1998	
		1.4 with K7J 701 engine	1998	
		1.4 with K7J 700 engine	1998	
		1.0 com motor D7D	1999	
		1.4 with E7J 634 engine	1998	
		1.4 with E7J 635 engine	1998	
	Laguna	1.8 with F3P 720 engine	1993	2001
		1.8 with F3P 724 engine	1993	2001
		2.0 with F3R 722 engine	1993	2001
		2.0 with F3R 723 engine	1993	2001
		Grandtour 2.0 with F3R 722 engine	1995	2001
		Grandtour 2.0 with F3R 723 engine	1995	2001
	Megane	Classic 2.0i with F3R 750 engine	1996	
		Coach 1.9 DTi with F9Q 736 engine	1997	2001
		Classic 2.0i with F3R 751 engine	1996	
		Classic 1.6e with K7M 702 engine	1996	1999
		Classic 1.6e with K7M 703 engine	1996	1999
		Classic 1.6e with K7M 790 engine	1996	1999
		I 2.0i with F3R 750 engine	1996	
		Classic 1.6i with K7M 720 engine	1996	1999
		I 2.0i with F3R 751 engine	1996	
		Cabriolet 1.6e with K7M 702 engine	1996	1999
		I 1.6i with K7M 720 engine	1996	1999
		Cabriolet 1.6e with K7M 703 engine	1996	1999
		I 1.6e with K7M 702 engine	1996	1999
		Cabriolet 2.0 16V with F7R 710 engine	1996	1999
		I 1.6e with K7M 703 engine	1996	1999
		Cabriolet 2.0 16V with F7R 714 engine	1996	1999
		I 1.6e with K7M 790 engine	1996	1999
		Scenic 2.0i with F3R 750 engine	1997	1999

		I 1.4 Eco with E7J 624 engine	1996	1999
		Scenic 2.0i with F3R 751 engine	1997	1999
		Coach 2.0i with F3R 750 engine	1996	
		Scenic 1.6i with K7M 720 engine	1997	1999
		Coach 2.0i with F3R 751 engine	1996	
		Scenic 1.6e with K7M 702 engine	1997	1999
		Coach 1.6e with E7M 702 engine	1996	1999
		Scenic 1.6e with K7M 703 engine	1997	1999
		Coach 1.6e with E7M 703 engine	1996	1999
		Scenic 1.4i with E7J 764 engine	1997	1999
		Coach 2.0 16V with F7R 710 engine	1996	1999
		I 1.9 DTi with F9Q 730 engine	1997	2001
		Coach 2.0 16V with F7R 714 engine	1996	1999
		I 1.9 DTi with F9Q 731 engine	1997	2001
		I 2.0 16V with F7R 714 engine	1996	
		I 1.9 DTi with F9Q 734 engine	1997	2001
		I 2.0 16V with F7R 710 engine	1996	
		I 1.9 DTi with F9Q 736 engine	1997	2001
		Classic 1.4 with E7J 626 engine	1996	
		Coach 1.9 DTi with F9Q 731 engine	1997	2001
		Classic 1.4 with E7J 764 engine	1996	
		Coach 1.9 DTi with F9Q 734 engine	1997	2001
	R11	1.7 with F3N 718 engine	1984	1988
		1.7 with F3N 708 engine	1987	1988
	R19	I Chamade 1.7 with F3N 742 engine	1988	1992
		I Chamade 1.7 with F3N 743 engine	1988	1992
		I 1.7 with F3N 740 engine	1988	1992
		I 1.7 with F3N 741 engine	1988	1992
		I 1.7 with F3N 742 engine	1988	1992
		I 1.7 with F3N 743 engine	1988	1992
		I Cabriolet 1.7 with F3N 742 engine	1991	1992
		I Cabriolet 1.7 with F3N 743 engine	1991	1992
		II 1.4 with E7J 742 engine	1992	1995
		II Chamade 1.8 with F3P 700 engine	1993	1995
		II 1.8 with F3P 706 engine	1992	1995
		II 1.8 with F3P 760 engine	1992	1995
		II 1.7 with F3P 743 engine	1992	1995
		II 1.8 with F3P 682 engine	1994	1995
		II 1.8 with F3P 765 engine	1994	1995
		II 1.8 with F3P 707 engine	1992	1995
		II 1.8 with F3P 708 engine	1992	1995
	R21	Saloon 1.7 with F3N 723 engine	1986	1994
		Estate 1.7 with F2N 712 engine	1986	1987
		Estate 1.7 with F3N 723 engine	1989	1993
		Estate 1.7 with F3N 722 engine	1989	1993
		Estate 1.7 with F3N 726 engine	1988	1993
		1.7 with F3N 726 engine	1989	1992
		Saloon 1.7 with F2N 712 engine	1986	1987
		Saloon 1.7 with F2N 710 engine	1986	1993
		Saloon 1.7 with F3N 722 engine	1986	1994
	R9	1.7 with F3N 718 engine	1986	1988
	Rapid	Box 1.4 with E7J 720 engine	1991	1998
		Box 1.4 with E7J 724 engine	1991	1998
		Box 1.4 with E7J 726 engine	1991	1998
		Box 1.4 with E7J 773 engine	1991	1998
		Box 1.4 with E7J 728 engine	1994	1998
	Scic	2.0 com motor F3R	1999	
	Super	5 1.7i with F3N 702 engine	1986	1991
		5 1.7i with F3N 722 engine	1986	1991
		5 1.7 with F3N 716 engine	1986	1995
		5 1.7 with F3N 717 engine	1986	1995
		5 1.7 with F2N 740 engine	1987	1995
		5 1.7 with F2N 742 engine	1987	1995
	Trafic	Box 1.7 with F1N 724 engine	1986	1989
		Bus 1.7 with F1N 724 engine	1986	1989
		Flatbed / Chassis 1.7 with F1N 722	1989	1994
Montadora / Car Maker	**Veículo / Vehicle**	**Variação do modelo / Model variation:**	**De / From:**	**Até / To:**